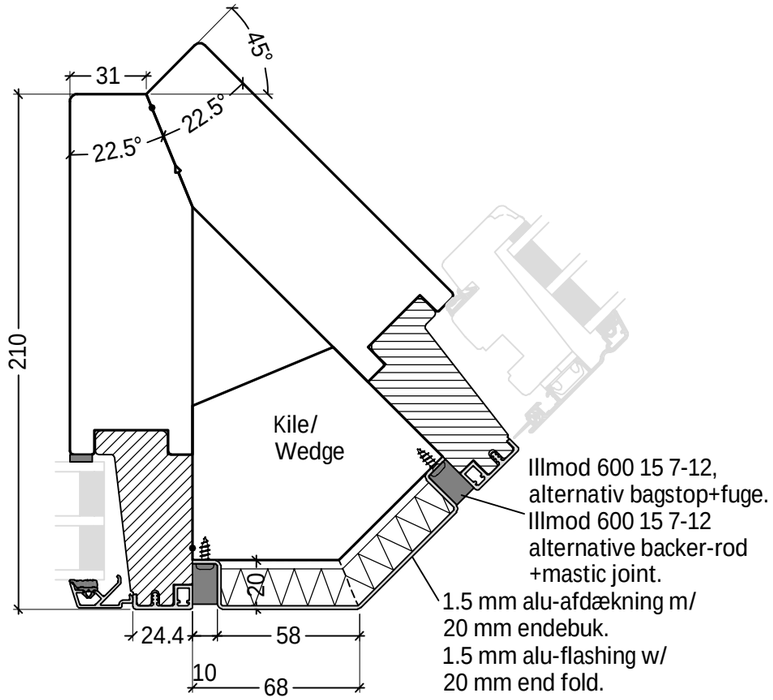

FRAic_HJL103_210

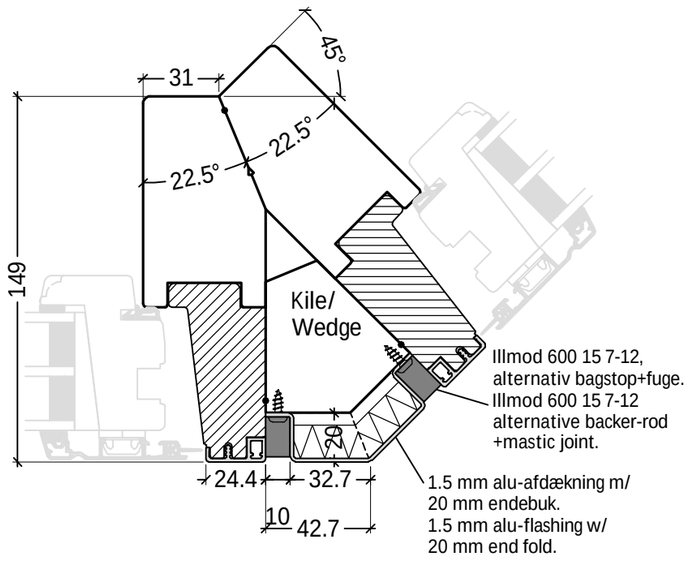

FRAic_HJL103_149

Standard løsning:
Alu-afdækning og kilerer tilvalg.
Øvrige montage materialer
leveres af montør.
122 mm karm - HK73.
149 mm karm - HK72.
175 mm karm - HK71.
210 mm karm - HK70.
Skrueafstande og skrueplacering
som standard montage.

Standard solution:
Alu-flashing and wedge is optional.
Other installation materials by instaler.
122 mm frame - HK73.
149 mm frame - HK72.
175 mm frame - HK71.
210 mm frame - HK70.
Fixing points and fixing areas
as standard installation.

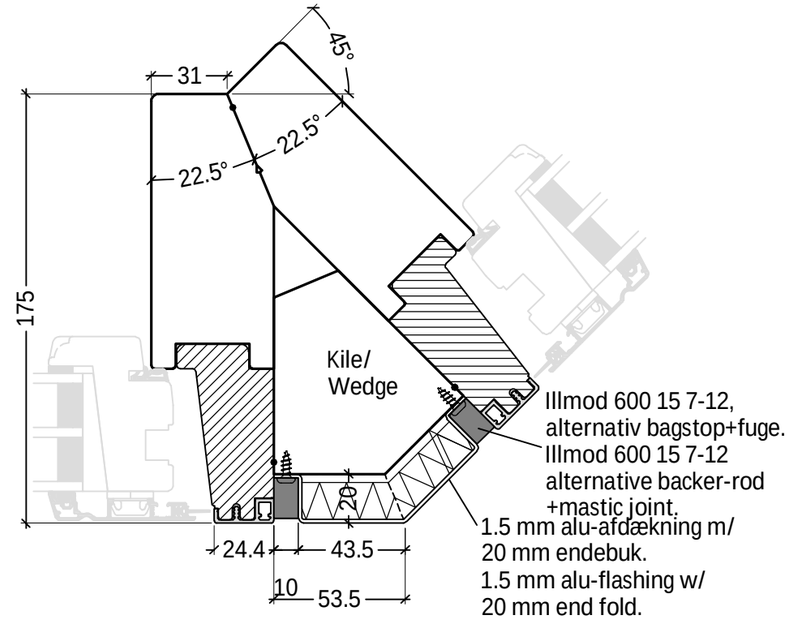

FRAic_HJL103_175

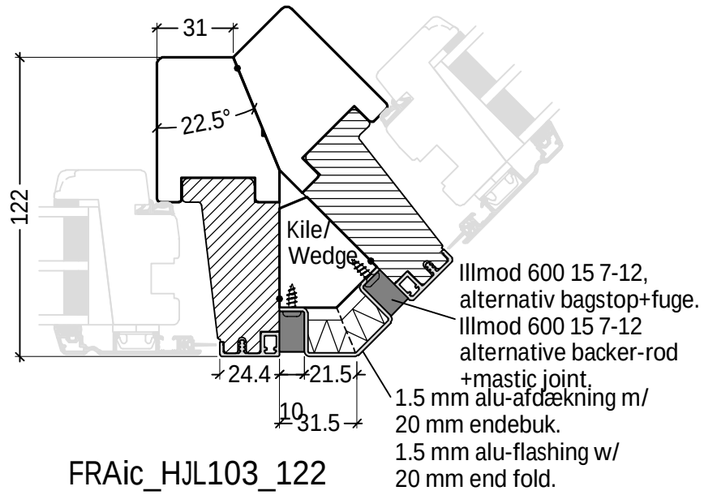

FRAic_HJL103_122

DK	Standard hjørneløsning 45°	
	122/149/175/210 mm karm med smigskæring	www.idealcombi.dk
UK	Standard corner solution 45°	
	122/149/175/210 mm bevelled frame	www.idealcombi.com
TYPE	Frame IC	Rev. no. 04
		Drawing no. FRAic-HJL103

©Idealcombi A/S 2011. This material is the property of and copyright protected by IDEALCOMBI A/S.

idealcombi
Udvikler vinduet